Computer Network Course Practice

Lab-3 inter-VLAN Routing

CONTENTS

Objectives 2
Required Resources 2
Background 2
Inter-LAN Routing 2
Inter-LAN Routing solutions 2
Dot1q termination 3
VLAN interface (VLANIF) 3
Lab-3-1: VLANIF Configuration 4
Requirements 4
Steps 4
Lab-3-2: One-armed Router Configuration 6
Requirements 6
Steps 6
Comments 9

OBJECTIVES

1. Enhance the understanding of VLAN and improve VLAN configuration skills.
2. Understand inter-VLAN routing and solutions.
3. Configure Inter-VLAN Routing on Layer-3 switch using VLAN interface.
4. Understand Dot1q termination or Dot1Q encapsulation sub-interface technology and configure inter-VLAN routing on the router using sub-interface.

REQUIRED RESOURCES

1. Huawei eNSP.
2. ping.
3. tracert.
4. Wireshark.

BACKGROUND

Inter-LAN Routing

We have learned that using VLANs to segment a switched network provides improved performance, manageability, and security. We have also learned that the trunk link can carry information from multiple VLANs between devices to achieve VLAN across-device span. But each VLAN is its own subnet and broadcast domain, which means that frames broadcasted onto the network are switched only between the ports within the same VLAN. By default, only hosts that are members of the same VLAN can communicate, hosts in one VLAN cannot communicate with hosts in another VLAN without the intervention of a routing device. When we want communication between different VLANs we'll need a device that can do Layer 3 routing.

Any device that supports Layer 3 routing, such as a router or layer-3 switch, can be used to perform the necessary routing functionality. Regardless of the device used, the process of forwarding network packets from one VLAN to another VLAN using routing is known as inter-VLAN routing.

Inter-LAN Routing solutions

Three common inter-VLAN routing architectures are used in modern LAN networks today:

1. **Router.** In this legacy approach, inter-VLAN routing is performed by connecting different physical router interfaces to different physical switch ports. The ports that connect to the router from the switch are configured in access mode in their corresponding VLANs. Each router interface can then accept traffic from the VLAN associated with the switch interface that it is connected to, and traffic can be routed to the other VLANs connected to the other interfaces. The major issue with this architecture is performance. Because routers are software-based, they cannot route packets as fast as switches (hardware-based) can switch frames. Another issue with this architecture is the number of routers and physical interfaces required to support multiple VLANs. A dedicated Ethernet interface is required per VLAN. Routers are low-density devices, meaning that there is a high cost per port and multiple routing devices might be required to support multiple VLANs, increasing the complexity of the network. Since one Ethernet interface is needed on the router to connect to each VLAN, this option is not really scalable and rarely used today.
2. **Router-on-a-stick using trunks (one-armed router).** Router-on-a-stick using trunks or one-armed router is a router that routes traffic between virtual local area networks (VLANs). The traditional router architecture has physical limitations based upon a dedicated physical interface being required for each VLAN. This limitation can be removed by using trunk interfaces, where multiple VLANs are supported on a single physical interface by using tagging technologies such as 802.1Q. Rather than using physical interfaces to attach the router to each VLAN, virtual or logical interfaces are used to attach the router to each VLAN.
3. **Layer 3 switching.** Layer 3 switching is a new form of inter-VLAN routing on the LAN. With a Layer 3 switch, the traditionally separated Layer 2 and Layer 3 functions are combined into a single device, eliminating the bottleneck associated with the cable between a router and switch by replacing the cable with a high-speed backplane connection. Layer 3 switches also typically perform routing in specially designed hardware circuitry rather than software, using specialized hardware that can perform routing functions at high speed. This means that the performance of Layer 3 switches is much higher than traditional router-on-a-stick architectures.

Dot1q termination

VLAN termination is a VLAN tag processing mechanism. Dot1q termination removes the outer VLAN tag from the received single-tagged or double-tagged frames, and adds a VLAN tag to the frames to be sent by an interface.
VLAN termination is configured on sub-interfaces. A sub-interface that terminates single tags in packets is called a Dot1q termination sub-interface.
Sub-interfaces are multiple logical interfaces configured on a main interface to allow the main interface to communicate with multiple remote interfaces. Sub-interfaces can share physical layer parameters of their main interface, or be configured with their respective link layer parameters and network layer parameters.

VLAN interface (VLANIF)

VLAN interfaces are Layer 3 virtual interfaces (which do not exist physically on devices) used for Layer 3 interoperability between different VLANs. Each VLAN can have one VLAN interface. Packets of a VLAN can be forwarded on network layer through the corresponding VLAN interface. As each VLAN forms a broadcast domain, a VLAN can be an IP subnet, so an IP address can be assigned to a VLAN interface, and the VLAN interface can be used as a gateway to enable IP address-based Layer 3 forwarding.

LAB-3-1: VLANIF CONFIGURATION

Requirements

The network topology is shown in Figure 3-1. This network has been implemented in Lab-2-4. The computers of Department A are in VLAN 10, and the computers of Department B in VLAN 30. A trunk is configured between the switches to span VLAN cross-switch. Now, it is required to communicate between VLAN 10 and 30 so that departments can share resources. Please configure VLANIF on switches to implement Inter-VLAN Communication.

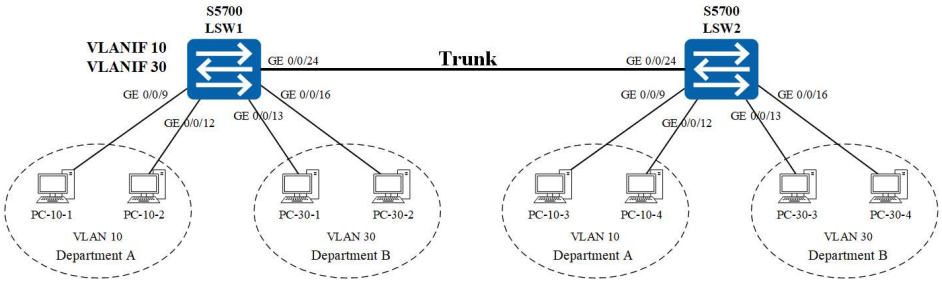

Figure 3-1 InterVLAN communication using VLANIF

The IPv4 address allocation in different VLANs are shown in Table 3-1.

Table 3-1 IPv4 Address Allocation

	IPv4 Address	Mask	Default Gateway
VLAN 10	**192.168.10.0**	**255.255.255.0**	
PC-10-1	192.168.10.11	255.255.255.0	192.168.10.1
PC-10-3	192.168.10.13	255.255.255.0	192.168.10.1
VLAN 30	**192.168.30.0**	**255.255.255.0**	
PC-30-1	192.168.30.11	255.255.255.0	192.168.30.1
PC-30-3	192.168.30.13	255.255.255.0	192.168.30.1
VLANIF on LSW1			
VLANIF 10	192.168.10.1	255.255.255.0	
VLANIF 30	192.168.30.1	255.255.255.0	

Steps

Step 1: Load and modify the topology.

1. Start eNSP and click the "Open" icon in the toolbar, and load the topology file **lab-2-4 VLAN.TRUNK.topo** saved in lab-2-4. PC-10-2, PC-10-4, PC-30-2 or PC-30-4 can be deleted or kept.
2. Check and make sure the settings of the IP address, subnet mask and default gateway of each PC match the address allocation.
3. Click the "Save As" icon in the toolbar to save the topology as **lab-3-1 InterVLAN.VLANIFtopo**.

Step 2: Start devices.

Click the " Start Device" icon in the toolbar to start all devices.

Step 3: Check and finish VLAN Configurations.

Check whether VLAN 10 and VLAN 30 have been created, the ports have been assigned to the specified VLAN 10 and VLAN 30, and the trunk is configured on the switch LSW1 and LSW2. And the computers in the same VLAN can ping each other.

Double-click the icon of switch LSW1 and LSW2 in the work area to open the switch configuration window.

```
<huawei> display vlan
<huawei> display vlan summary
<huawei> display port vlan
```

Ping PC-10-3 from PC-10-1 command window and visa versa.

Ping PC-30-3 from PC-30-1 command window and visa versa.

If VLANs or ports are not configured or the computers in the same VLAN cannot ping each other, follow the instructions in lab-2-4 to make the computers in the same VLAN ping each other.

Step 4: Configure VLANIF on switch LSW1.

```
<LSW1> system-view
# create interface to VLAN 10 and 30, and assign IP address to it. The mask is 255.255.255.0 or /24.
[LSW1] interface vlanif 10
[LSW1-Vlanif10] ip address 192.168.10.1 24
[LSW1-Vlanif10] quit
[LSW1] interface vlanif 30
[LSW1-Vlanif30] ip address 192.168.30.1 24
[LSW1-Vlanif30] quit
# display all interfaces' status.
[LSW1] display interface brief
# display all interfaces' IP information.
[LSW1] display ip interface brief
# display VLANIF IP information.
[LSW1] display IP interface vlanif 10
[LSW1] display IP interface vlanif 30
# display IP routing table.
[LSW1] display IP routing-table
```

Step 5: Verify the configurations and analyze the traffic on the trunk link.

Start data capture on interfaces GE 0/0/24 on switch LSW1.
Ping PC-10-3 from PC-10-1 command window and visa versa.
Ping PC-30-3 from PC-30-1 command window and visa versa.
Ping PC-30-3 from PC-10-1 command window and visa versa.
Ping PC-10-3 from PC-30-1 command window and visa versa.
Trace the route from PC-10-1 to PC-30-3. Enter the following command in PC-10-1's command window:

```
tracert 192.168.30.13
```

Answer the following questions:

Q3-1.1. Paste the screenshot of the created topology.
Q3-1.2. Paste the screenshot of the IP routing table on the switch LSW1.
Q3-1.3. Can PC-10-1 and PC-10-3 ping each other? Please paste the screenshot of the ping result.
Q3-1.4. Can PC-30-1 and PC-30-3 ping each other? Please paste the screenshot of the ping result.
Q3-1.5. Can PC-10-1 and PC-30-3 ping each other? Please paste the screenshot of the ping result.
Q3-1.6. Please paste the screenshot of the result of command "tracert 192.168.30.13" issued from PC-10-1.
Q3-1.7. Analyze the captured ping traffics between the PC-10-1 and PC-10-2. What are the tagged VLAN IDs of the Ethernet frames leaving and entering the port? Please paste the screenshot of the all field information of the captured Ethernet frame.
Q3-1.8. Analyze the captured ping traffics between the PC-10-1 and PC-30-2. What are the tagged VLAN IDs of the Ethernet frames leaving and entering the port? Please paste the screenshot of the all field information of the captured Ethernet frames.

LAB-3-2: ONE-ARMED ROUTER CONFIGURATION

Requirements

The network topology is shown in Figure 3-1. The computers of Department A and B are connected to the campus network through two S5700 access layer switches LSW1 and LSW2. The access layer switches are connected to a AR2220 router RTA through a S5700 aggregation layer switch LSW3, allowing users to access the campus network and external Internet. The Gigabit ports GE /0/0/9 to GE 0/0/12 on the switches LSW1 and LSW2 belong to VLAN 10 and ports GE 0/0/13 to GE 0/0/16 belong to VLAN 30. The computers of Department A are in VLAN 10, and the computers of Department B in VLAN 30. It is now decided to use a one-armed router and Dot1q termination sub-interfaces to implement the communication between VLANs. Please complete the system configurations.

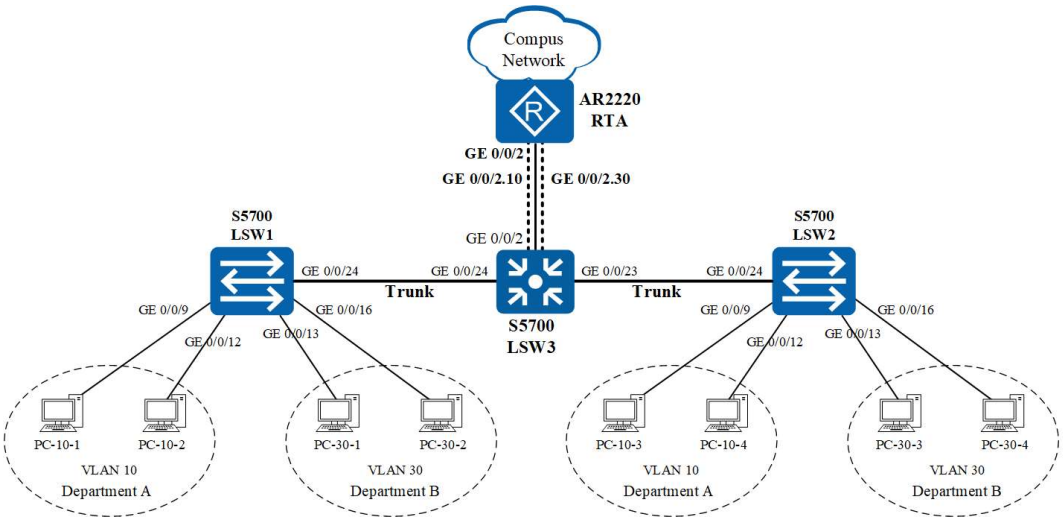

Figure 3-2 InterVLAN communication via One-armed Router

The IPv4 address allocation in different VLANs are shown in Table 3-2.

Table 3-2 IPv4 Address Allocation

	IPv4 Address	Mask	Default Gateway
VLAN 10	**192.168.10.0**	**255.255.255.0**	
PC-10-1	192.168.10.11	255.255.255.0	192.168.10.1
PC-10-3	192.168.10.13	255.255.255.0	192.168.10.1
VLAN 30	**192.168.30.0**	**255.255.255.0**	
PC-30-1	192.168.30.11	255.255.255.0	192.168.30.1
PC-30-3	192.168.30.13	255.255.255.0	192.168.30.1
Sub-interfaces on router RTA			
GE 0/0/2.10	192.168.10.1	255.255.255.0	
GE 0/0/2.30	192.168.30.1	255.255.255.0	

Steps

Step 1: Create the topology, cable a network.

1. Start eNSP and click the "New Topology" icon in the toolbar.
2. Add three S5700 switches and four PCs to the blank work area.
3. Cable as necessary.
4. Name these switches and PCs.

Step 2: Assign the IPv4 address and subnet mask for PCs.

1. Double-click each PC, select the "Basic Config" tab in the pop-up window, and configure the IPv4 address and subnet mask for it.
2. After configuration, click the "Save" icon in the toolbar to save the topology to the specified directory, and name the topology file **lab-3-2 InterVlan.OneArmedRouter.topo**.

Step 3: Start devices.

Click the " Start Device" icon in the toolbar to start all devices.

Step 4: Configure port-based VLANs on switches and trunks between switches.

1. Follow the instructions in lab-2-1 to create **port-based VLAN 10 and 30** on switches LSW1 and LSW2 respectively.
2. Follow the Step 4 in lab-2-4 to configure the interface GE 0/0/24 on both switches of LSW1 and LSW2 as a **trunk port**.
3. Configure VLANs and trunk ports on switch LSW3.

Double-click the icon of switch LSW3 in the work area to open its configuration window.

```
<huawei> system-view
[huawei] sysname LSW3
# create VLANs in batch
[LSW3] vlan batch 10 30
# set the link type of interface GE 0/0/2, GE 0/0/23 and GE 0/0/24 to trunk. By default, the link type of an interface is hybrid.
[LSW3] interface gigabitethernet 0/0/2
[LSW3-GigabitEthernet0/0/2] port link-type trunk
[LSW3-GigabitEthernet0/0/2] port trunk allow-pass vlan 10 30
[LSW3-GigabitEthernet0/0/2] quit
[LSW3] interface gigabitethernet 0/0/23
[LSW3-GigabitEthernet0/0/23] port link-type trunk
[LSW3-GigabitEthernet0/0/23] port trunk allow-pass vlan 10 30
[LSW3-GigabitEthernet0/0/23] quit
[LSW3] interface gigabitethernet 0/0/24
[LSW3-GigabitEthernet0/0/24] port link-type trunk
[LSW3-GigabitEthernet0/0/24] port trunk allow-pass vlan 10 30
[LSW3-GigabitEthernet0/0/24] quit
[LSW3] display vlan
```

Step 5: Verify the configurations.

Ping PC-10-3 from PC-10-1 command window and visa versa.

Ping PC-30-3 from PC-30-1 command window and visa versa.

If they cannot ping each other, it may mean that the configurations of the switches are incorrect. You must ensure that the computers in the same VLANs can ping each other before the next step.

Step 6: Configure the Dot1q termination sub-interface on the router to implement a one-armed router.

Double-click the icon of router RTA in the work area to open its configuration window.

```
<huawei> system-view
  [huawei] sysname RTA
# create sub-interface  GE 0/0/2.10 on the physical interface  GE 0/0/2
[RTA] interface gigabitethernet 0/0/2.10
# configure dot1q termination to VLAN 10
[RTA-GigabitEthernet0/0/2.10] dot1q termination vid 10
# assign IP address
[RTA-GigabitEthernet0/0/2.10] ip address 192.168.10.1 24
# IMPORTANT! enabled ARP broadcast on the sub-interface.
[RTA-GigabitEthernet0/0/2.10] arp broadcast enable
[RTA-GigabitEthernet0/0/2.10] quit
[RTA] interface gigabitethernet 0/0/2.30
[RTA-GigabitEthernet0/0/2.30] dot1q termination vid 30
[RTA-GigabitEthernet0/0/2.30] ip address 192.168.30.1 24
[RTA-GigabitEthernet0/0/2.30] arp broadcast enable
[RTA-GigabitEthernet0/0/2.30] quit
# display brief information of all interfaces
[RTA] display interface brief
# display brief IP information of interfaces
[RTA] display ip interface brief
```

```
[RTA] display ip interface 0/0/2.10
[RTA] display ip interface 0/0/2.30
# display IP routing table
[RTA] display IP routing-table
```

Step 7: Verify the configurations and analyze the traffic.

Start data capture on interfaces GE 0/0/2 and GE 0/0/24 on switch LSW3 and interfaces GE 0/0/2 on router RTA.
Ping PC-10-3 from PC-10-1 command window.
Trace the route from PC-10-1 to PC-30-3. Enter the following command in PC-10-1's command window:

```
tracert 192.168.30.13
```

Answer the following questions:

Q3-2.1. Paste the screenshot of the created topology.

Q3-2.2. Paste the screenshot of the IP routing table on the router RTA.

Q3-2.3. Can PC-10-1 and PC-10-3 ping each other? Please paste the screenshot of the ping result.

Q3-2.4. Paste the screenshot of the result of command "tracert 192.168.30.13" issued from PC-10-1.

Q3-2.5. Analyze the captured ping traffics between the PC-10-1 and PC-10-2. What are the tagged VLAN IDs of the Ethernet frames leaving and entering the interface GE 0/0/2 on switch LSW3 ? Please paste the screenshot of the all field information of the captured Ethernet frame.

Q3-2.6. Analyze the captured ping traffics between the PC-10-1 and PC-10-2. What are the tagged VLAN IDs of the Ethernet frames leaving and entering the interface GE 0/0/24 on switch LSW3 ? Please paste the screenshot of the all field information of the captured Ethernet frame.

Q3-2.7. Analyze the captured ping traffics between the PC-10-1 and PC-10-2. What are the tagged VLAN IDs of the Ethernet frames leaving and entering the interface GE 0/0/2 on router RTA? Please paste the screenshot of the all field information of the captured Ethernet frame.

COMMENTS

Your comments and/or suggestions on this lab: